CHEMICAL

OIL & GAS

REFRIGERATION

POWER GENERATION

SERVICE

Convincing worldwide: HERMETIC pumps in the refrigeration industry

LEDERLE Hermetic

Simply the best pump technology

RESPONSIBILITY FOR THE ENVIRONMENT

Attitudes towards environmental awareness as well as social responsibility have steadily grown in the refrigeration industry. As an essential feature refrigeration plants must operate in a hermetically sealed way and thus, the importance of tightness has become more and more important for engineering, ecological and economical reasons. Therefore, both safety in plants as well as environmental protection play an important role in business strategy. Not only ice-cream and frozen foods need to be cooled, but almost every food. Typical application ranges include rail vehicles, toboggan-runs, bob runs, breweries, etc. in which HERMETIC pumps have been successfully used for reliable cooling of plants and production processes. HERMETIC has been dedicated to the development and production of hermetically sealed pumps for a period of 50 years. HERMETIC pumps are designed for applications in the chemical and petrochemical industry, as well as for process technologies. The refrigeration industry also benefits from this experience made in these industries. There are more than 85,000 HERMETIC pumps installed in refrigeration plants worldwide.

HERMETIC – synonym for hermetically sealed pumps and reliability.

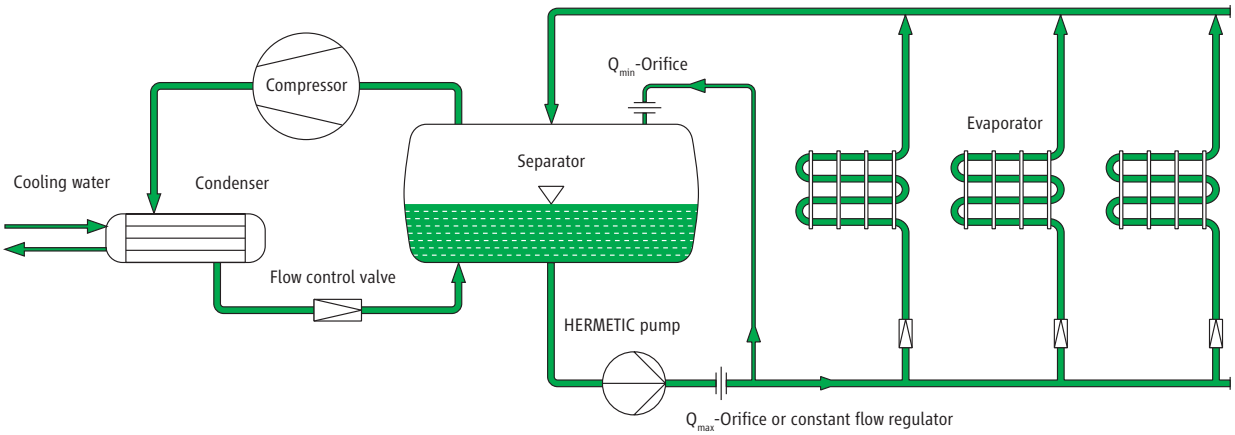

The figure shows the simplified scheme of a large refrigeration plant. The characteristic of this plant is that the refrigerant flows through a central fluid separator and is then conveyed to the evaporators. The resulting vapour and the surplus fluid return back to the separator. Compressor, condenser and flow control are incorporated in a secondary circuit.

Hermetically sealed pumps ensure a safe and controlled conveying of refrigerants. Besides absolute tightness HERMETIC refrigeration pumps feature the following:

- long service life
- low operating costs
- rapid and reduced acquisition and stockkeeping of spare parts.

APPLICATIONS FOR HERMETIC REFRIGERANT PUMPS

One pump. All applications

Over the past few years, a trend shift has become increasingly evident: As well as proven synthetic refrigerants, natural refrigerants such as those using ammonia and carbon dioxide have now also penetrated the market. As a result of this, the demands concerning refrigeration equipment and components have changed accordingly: Higher design pressures, new sealing materials and designs of ever-increasing compactness are now required. Moreover, low life-cycle costs and increased energy efficiency are reflected in modern pump technology.

New-generation refrigerant pumps have been designed for all applications: Regardless of whether NH_3, CO_2, water/glycol mixtures or synthetic oils is/are involved, the HERMETIC pumps from our stock meet the requirements.

Our canned motor pumps have been used in a wide range of applications for decades:

- Food industry: Cooling and deep-freezing with natural and synthetic refrigerants.
- Leisure and sports facilities, for example bobsleighs, ice rinks or hockey stadiums.
- Electronic and power converter modules in mobile (railway) and stationary (offshore wind-turbine) applications.
- Refrigeration modules in the chemical industry; pumps that can be used in potentially-explosive atmospheres are also available.
- Freeze-drying and oil-cooling systems for transformers.
- Databases: CO_2 cooling of server rooms and control cabinets.
- Absorption refrigeration applications with lithium bromide and NH_3

Pumped media

Liquids and liquid gases, e.g. NH_3 (R 717), CO_2 (R744), R22, R134a, hydrocarbons, R404a, R11, R12, Baysilone silicone oil (M3, M5), methanol, KT3 silicone oil, Syltherm XLT heat transfer liquid, lithium bromide, water/glycol mixtures

In principle, the refrigerant pumps are suitable for conveying all types of refrigerant. This has to be checked with each individual case, however.

HERMETIC pumps, that can in principle cover any common situation involving any type of pump. This allows plant manufacturers to use the same pump for the most diverse pumping applications. Operating authorities and plant manufacturers benefit from pumps in stock, which are delivered quickly and reliably, not just for emergency orders but for standard orders too.

HERMETIC refrigerant pump in the chemical industry

Food industry: CO_2

SINGLE-STAGE CANNED MOTOR PUMPS

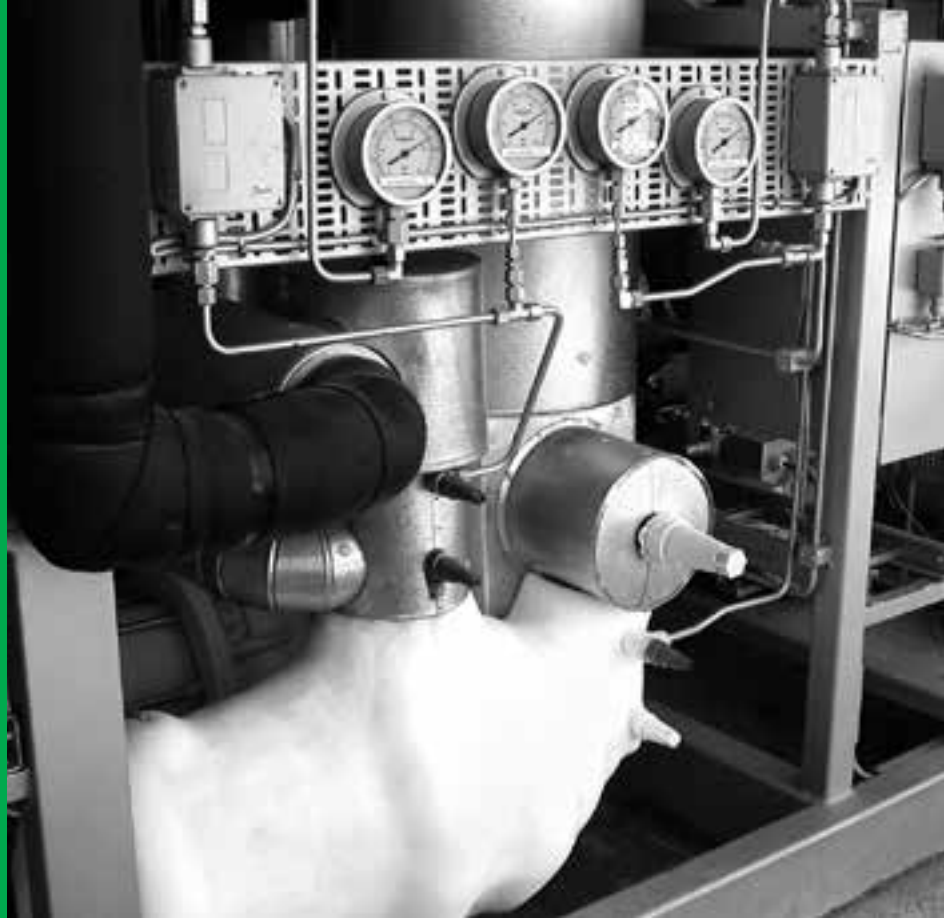

General

HERMETIC pumps are completely self-contained centrifugal pumps without any shaft sealing, driven electro-magnetically by the canned motor.

The CNF model has been specially developed for pumping liquefied petroleum gas. This single-stage pump design now allows for the pumping of liquefied petroleum gases with an extremely steep vapour pressure diagram. There is no need for external re-circulation of the partial flow into the suction vessel and the separator.

Design

The pumps use a single-stage impeller mounted directly on an integral induction motor. The pump volute casings and impellers are derived from the standard chemical pumps as defined by EN 22858; ISO 2858.

Operating range

Capacity Q: max. 50 m^3/h
Head H: max. 57 m.c.l.

Operation

The partial flow for cooling the motor and lubricating the slide bearings is separated through a ring filter and, after having passed through the motor, is carried back again to the delivery side of the pump. An auxiliary impeller serves to overcome the hydraulic losses encountered along the way.

The return of the partial flow to the delivery side ensures that point 3 in the Pressure-Temperature-Diagram (Figure 1) is sufficiently distanced from the boiling-point curve of the diagram. With the CNF model, it is thus possible to pump liquefied petroleum gases with an extremely steep vapour pressure diagram conditions being the same, except for the gas to be pumped.

Bearings

Slide bearings radially guide the common pump and rotor shaft. This guiding is used during the starting phase and the stopping phase since the guiding function is hydrodynamically taken over by the rotor after the nominal speed of the canned motor has been reached. The axial thrust of our pumps is hydraulically balanced. The pumps are maintenance-free during operation.

Safety Devices and Monitoring

We recommend to protect HERMETIC pumps against any extreme flow conditions by means of two orifices. Orifice 1 (Q_{min}) ensures the minimum flow rate required for the dissipation of the motor heat loss. Orifice 2 (Q_{max}) ensures the minimum differential pressure in the rotor chamber needed for stabilising the hydraulic axial thrust balance and for avoiding the evaporation of the partial flow. Moreover, this orifice prevents an interruption of the flow of discharge if only a certain minimum suction head is available. Alternatively to orifice 2 (Q_{max}) a constant flow regulator can be installed (see page 22-24).

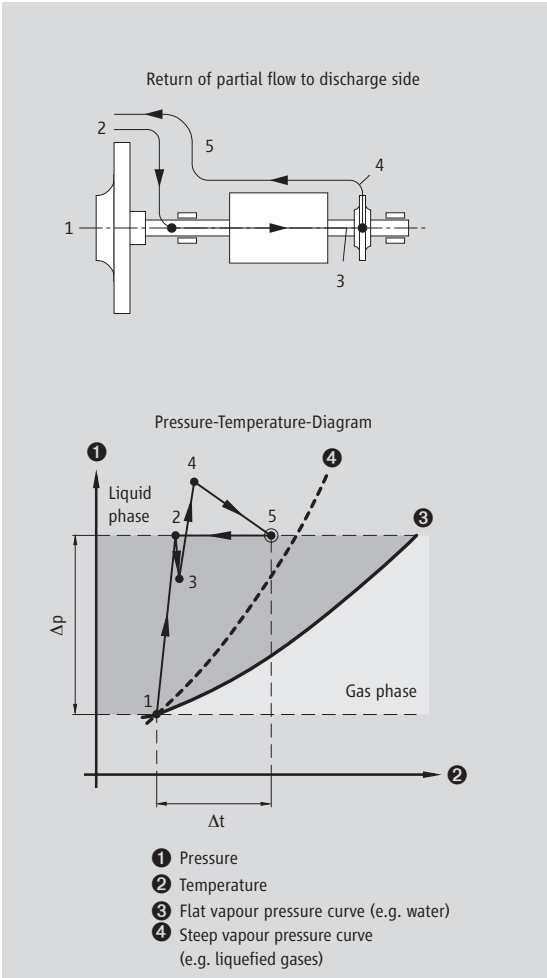

Figure 1

Performance Curve CNF 2900 rpm/50 Hz

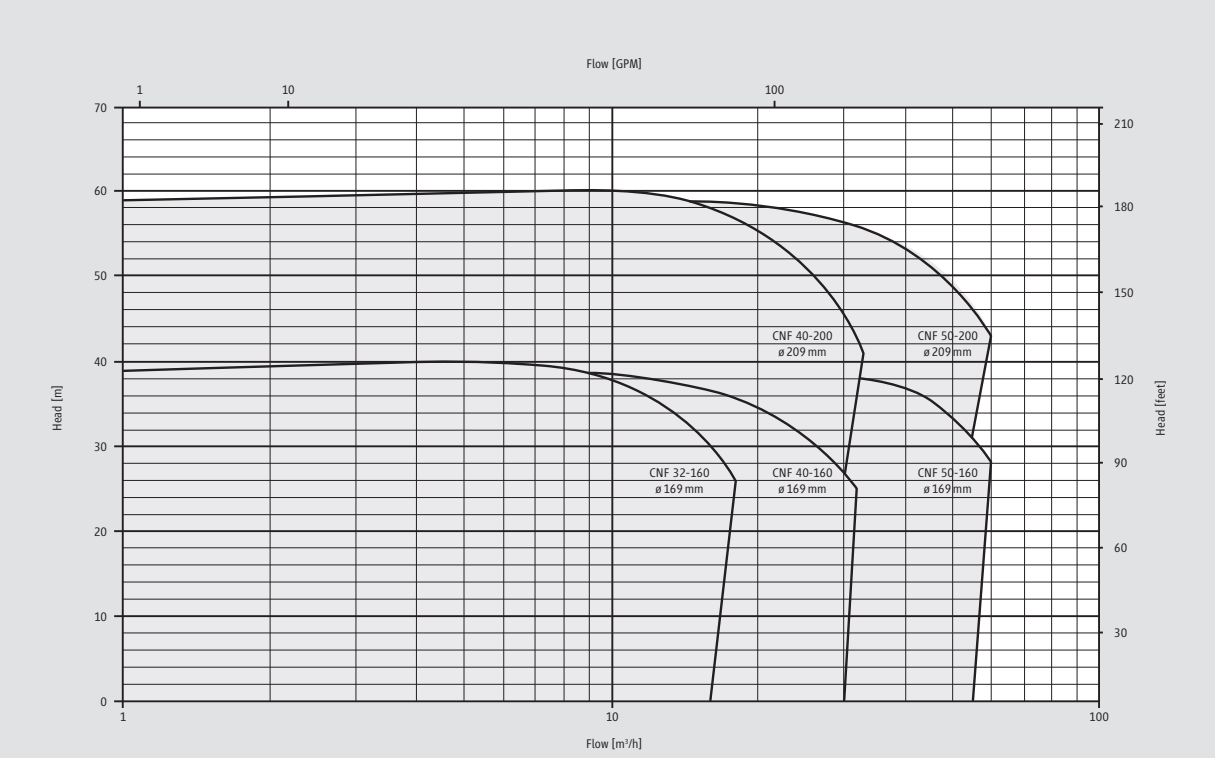

Performance Curve CNF 3600 rpm/60 Hz

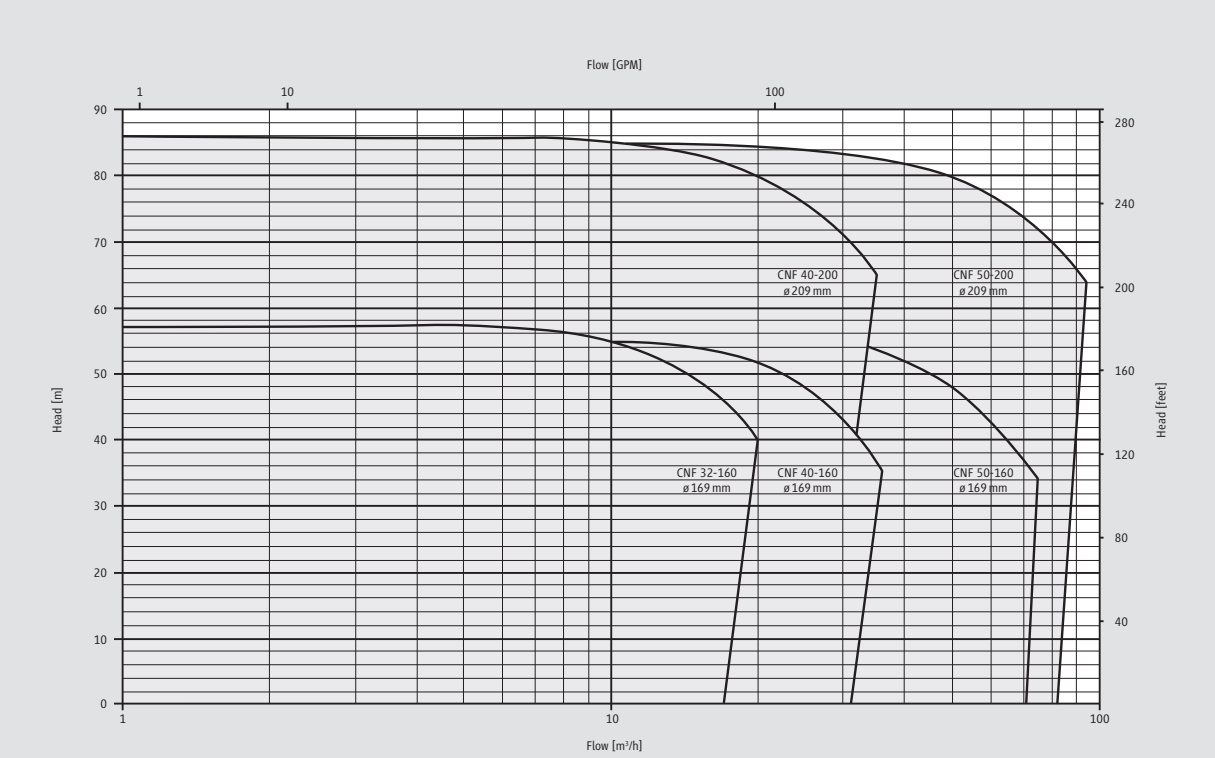

Materials / Pressure Ratings / Flanges

Casing	JS 1025
Impeller	JL 1040
Bearing	1.4021/carbon
Shaft	1.4021
Stator can	1.4571
Gaskets	AFM 34*
Pressure rating	PN 40**, PN 25
Flanges	according DIN 1092-1, PN 40 and PN 25 form D

Operating Temperature

Temperature range	–50 °C to +30 °C ***

Canned Motors

Power	up to 15.7 kW
Rotating speed	2800 rpm or 3500 rpm (frequency regulation possible)
Voltage	220, 230, 380, 400, 415, 440, 460, 500, or 575 Volt
Frequency	50 or 60 Hz
Enclosure	IP 55

* non asbestos
** Test pressure 60 bar
*** further temperatures on demand

CNF-Design

Type	Motor	Pump data		Motor data 50 Hz / 60 Hz		Gewicht	PN
		Q min. required m³/h	Q max. permissible m³/h	Power kW	Rated current at 400 V / 480 V	kg	
CNF 32 – 160	AGX 3.0	3.0	20.0	3.0 / 3.4	7.1	55.0	40
	AGX 4.5	3.0	20.0	4.5 / 5.6	10.4	63.0	40
CNF 40 – 160	AGX 3.0	4.0	26.0	3.0 / 3.4	7.1	58.0	40
	AGX 4.5	4.0	26.0	4.5 / 5.6	10.4	66.0	40
	AGX 6.5	4.0	26.0	6.5 / 7.4	15.2	69.0	40
	AGX 8.5	4.0	26.0	8.5 / 9.2	19.0	80.0	40
CNF 40 – 200	AGX 4.5	4.0	26.0	4.5 / 5.6	10.4	74.0	40
	AGX 6.5	4.0	26.0	6.5 / 7.4	15.2	77.0	40
	AGX 8.5	4.0	26.0	8.5 / 9.2	19.0	90.0	40
	CKPx 12.0	6.0	26.0	13.5 / 15.7	31.0	122.0	25
CNF 50 – 160	AGX 3.0	3.0	50.0	3.0 / 3.4	7.1	69.0	40
	AGX 4.5	8.0	60.0	4.5 / 5.6	10.4	77.0	40
	AGX 6.5	8.0	60.0	6.5 / 7.4	15.2	80.0	40
	AGX 8.5	8.0	60.0	8.5 / 9.2	19.0	91.0	40
	CKPx 12.0	8.0	60.0	13.5 / 15.7	31.0	118.0	25
CNF 50 – 200	AGX 6.5	8.0	60.0	6.5 / 7.4	15.2	82.0	40
	AGX 8.5	8.0	60.0	8.5 / 9.2	19.0	96.0	40
	CKPx 12.0	8.0	60.0	13.5 / 15.7	31.0	125.0	25

List of parts CNF

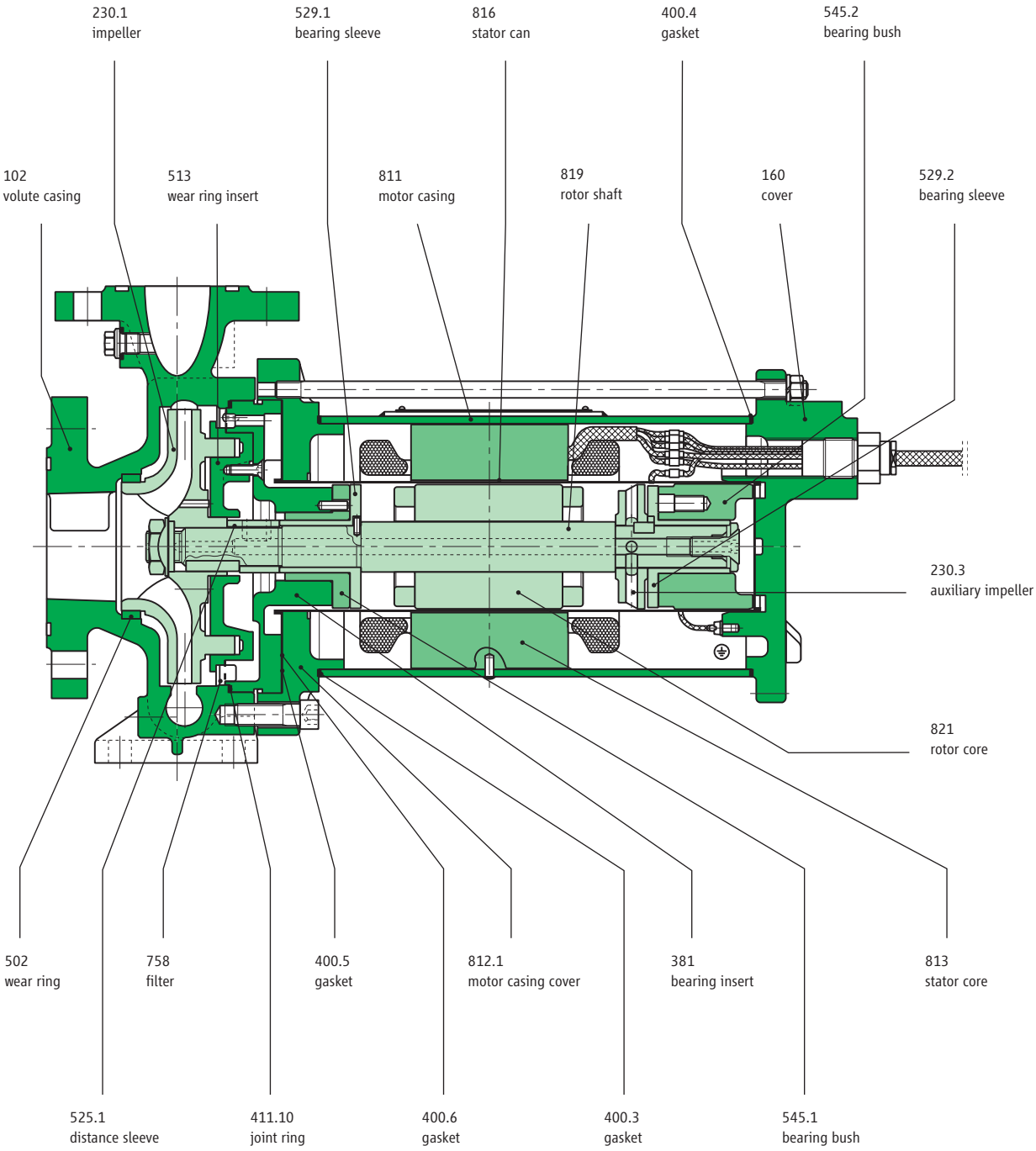

Dimensional drawing for motor type: AGX 3.0 / AGX 4.5 / AGX 6.5

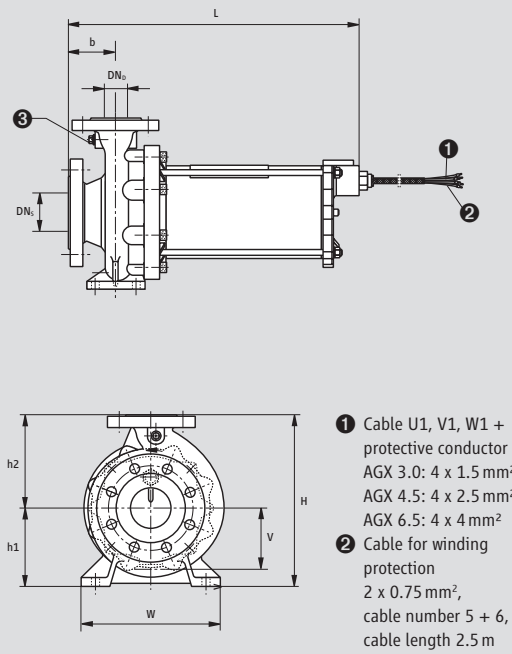

❶ Cable U1, V1, W1 + protective conductor ⏚
AGX 3.0: 4 x 1.5 mm²
AGX 4.5: 4 x 2.5 mm²
AGX 6.5: 4 x 4 mm²

❷ Cable for winding protection
2 x 0.75 mm²,
cable number 5 + 6,
cable length 2.5 m

❸ Pressure gauge
G 1/4

Dimensional drawing for motor type: AGX 8.5 / CKPx 12.0

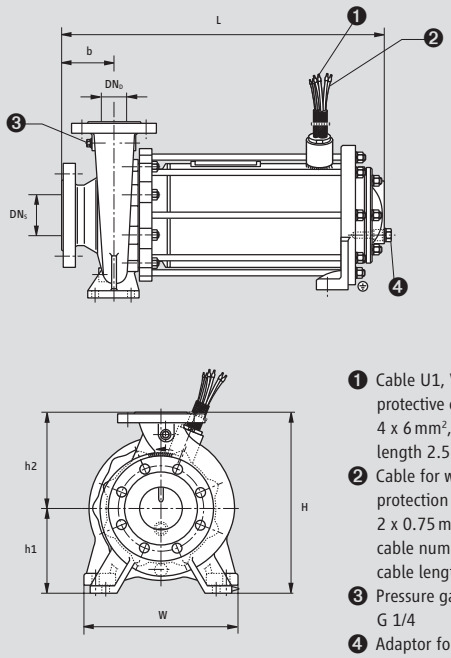

❶ Cable U1, V1, W1 + protective conductor ⏚
4 x 6 mm², cable length 2.5 m

❷ Cable for winding protection
2 x 0.75 mm²,
cable number 5 + 6,
cable length 2.5 m

❸ Pressure gauge
G 1/4

❹ Adaptor for connection of temperature monitor closed with plug DIN 912, G 1/2

CNF-Design

Dimension	CNF 32 – 160	CNF 40 – 160	CNF 40 – 160	CNF 40 – 200	CNF 40 – 200	CNF 50 – 160	CNF 50 – 160	CNF 50 – 200	CNF 50 – 200
	AGX 3.0/4.5	AGX 3.0 to 6.5	AGX 8.5	AGX 4.5/6.5	AGX/CKPx 8.5/12.0	AGX 3.0 to 6.5	AGX/CKPx 8.5/12.0	AGX 6.5	AGX/CKPx 8.5/12.0
Length/L	506	506	575	526	595/620	526	595/620	526	595/620
Width/W	240	240	240	265	265/290	265	265/290	265	265/290
Height/H	292	292	292	340	340	340	340	360	360
h1	132	132	132	160	160	160	160	160	160
h2	160	160	160	180	180	180	180	200	200
b	80	80	80	100	100	100	100	100	100
v	100	100	100	115	115	108	108	118	118
DN_S	50	65	65	65	65	80	80	80	80
DN_D	32	40	40	40	40	50	50	50	50

MULTISTAGE CANNED MOTOR PUMPS

General

The CAM und CAMR range of HERMETIC pumps are completely closed. They operate using the canned motor principle which removes the need for any shaft seal. The CAM and CAMR ranges have been developed especially for the refrigeration applications, their features include:

- low NPSH values
- pump built in two to six stages to suit the application
- able to pump 14 m^3/h with a suction head of only 0.3-0.5 m
- suitable for pumping ammonia, CO_2, freons and other refrigerants
- the machines were examined by several classification companies and also have approval for use on ships

The CAMR range is a special version of the CAM 2 range designed for compact plants with small collecting vessels. The design enables:

- space saving by mounting the pump directly under the vessel
- escaping of gas through the suction port, allowing shorter re-starting times
- the hydraulic data and NPSH value are identical to the CAM 2

Design

The pumps use multistage impeller mounted directly on an integral induction motor.

Operating range

Capacity Q: max. 35 m^3/h
Head H: max. 170 m.c.l.

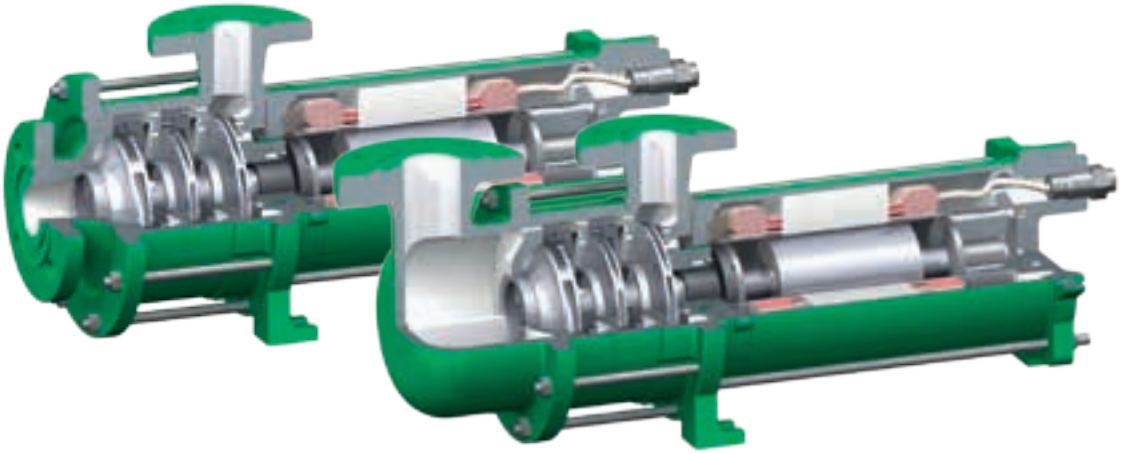

Operation

The partial current for the cooling of the motor and for the lubricating of the bearing is taken from the last impeller on the discharge side and led through the motor space. It is led back through the sleeve shaft not to the suction side of the pump but between two impellers in a region with increased pressure. The point 3, which corresponds to the highest heating in the pressure-temperature-diagram, is sufficiently distanced from the vapour diagram, in order to avoid a boiling out inside the pump.

Bearings

Slide bearings are lubricated by the processed liquid radially guide the pump shaft and the rotor shaft. This guiding, however, takes place only during the starting phase and the stopping phase, since the guiding function is hydrodynamically taken over by the rotor after the nominal speed of the canned motor has been reached. The axial thrust of our pumps is hydraulically balanced. The pumps are maintenance-free during operation.

Safety Devices and Monitoring

We recommend to protect HERMETIC pumps against any extreme flow conditions by means of two orifices. Orifice 1 (Q_{min}) ensures the minimum flow rate required for the dissipation of the motor heat loss. Orifice 2 (Q_{max}) ensures the minimum differential pressure in the rotor chamber needed for stabilising the hydraulic axial thrust balance and for avoiding the evaporation of the partial flow. Moreover, this orifice prevents an interruption of the flow of discharge if only a certain minimum suction head is available. Alternatively to orifice 2 (Q_{max}) a constant flow regulator can be installed (see page 22-24).

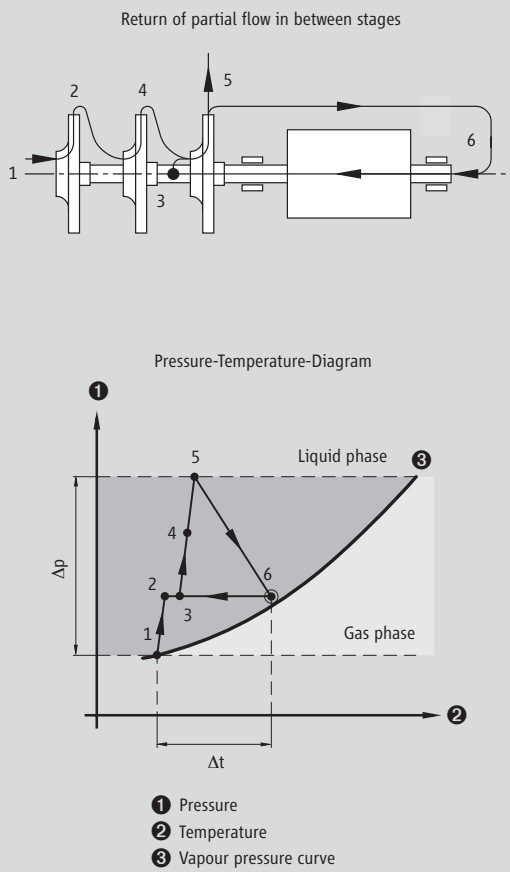

Figure 2

Performance Curve CAM 2900 rpm/50 Hz

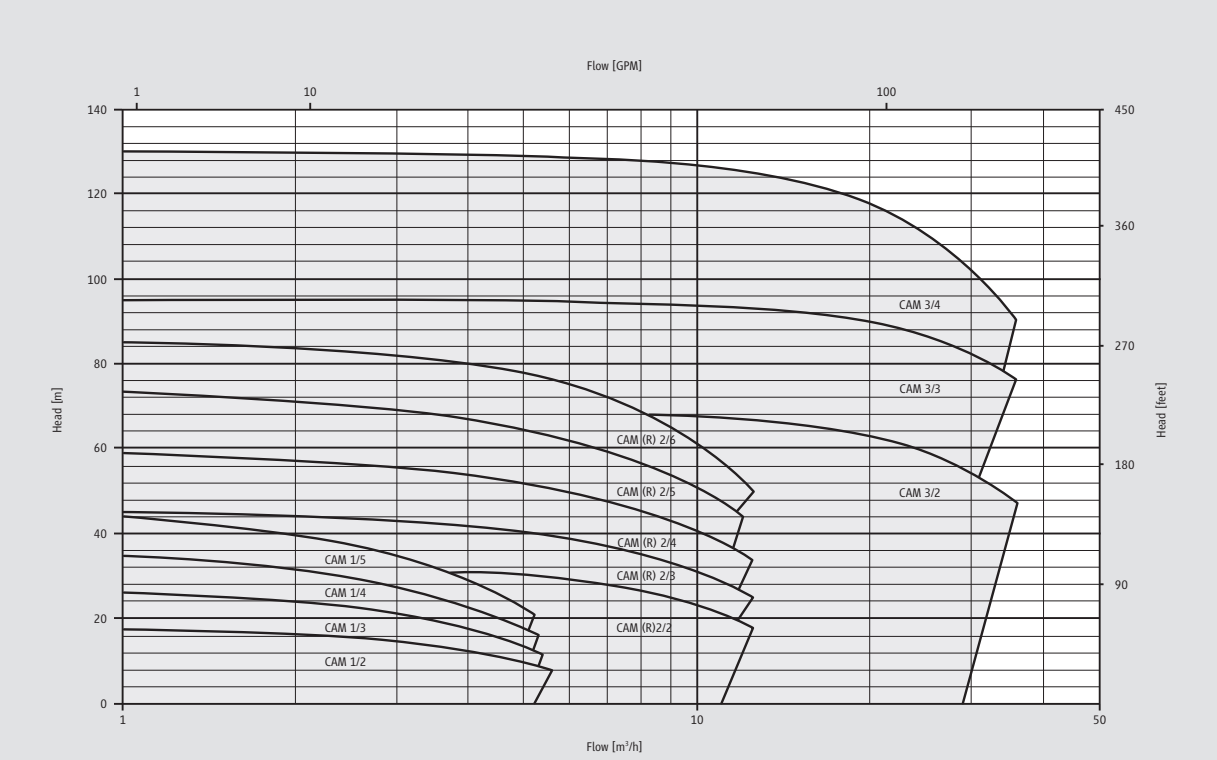

Performance Curve CAM 3600 rpm/60 Hz

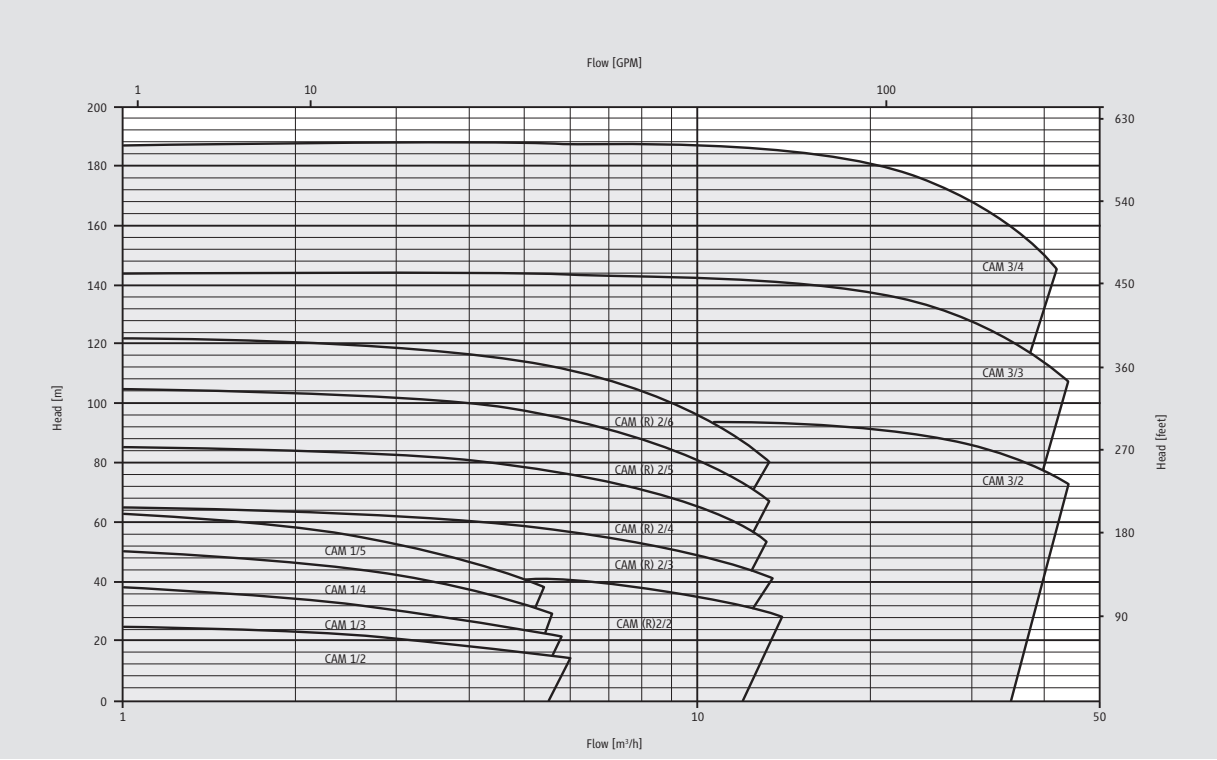

Materials / Pressure Ratings / Flanges

Casing	JS 1025
Suction cover (Suction casing CAMR 2)	JS 1025
Stage casing (CAM 1, CAM 2, CAMR 2)	1.0460
Stage casing (CAM 3)	JS 1025
Diffuser insert (Diffuser CAM 3)	JL 1030
Impellers	JL 1030
Bearing	1.4021/carbon
Shaft	1.4021
Stator can	1.4571
Gaskets	AFM 34*
Pressure rating	PN 40**, PN 25
Flanges	according DIN 1092-1, PN 40 and PN 25 form D

Operating Temperature

Temperature range	–50 °C to +30 °C ***

Canned Motors

Power	up to 25.0 kW
Rotating speed	2800 rpm or 3500 rpm (frequency regulation possible)
Voltage	220, 230, 380, 400, 415, 440, 460, 500, or 575 Volt
Frequency	50 or 60 Hz
Enclosure	IP 55

* non asbestos
** Test pressure 60 bar
*** further temperatures on demand

CAM / CAMR- Design

Typ	Motor	Pump data		Motor data 50 Hz / 60 Hz		Weight	PN
		Q min. required m^3/h	Q max. permissible m^3/h	Power kW	Rated current at 400 V / 480 V	kg	
CAM 1/2	AGX 1.0	0.5	4.0	1.0/1.2	2.7	27.0	40
CAM 1/3	AGX 1.0	0.5	4.0	1.0/1.2	2.7	28.0	40
CAM 1/4	AGX 1.0	0.5	4.0	1.0/1.2	2.7	29.0	40
CAM 1/5	AGX 1.0	0.5	4.0	1.0/1.2	2.7	30.0	40
CAM (R) 2/2	AGX 3.0	1.0	13.0	3.0/3.4	7.1	48.0	40
CAM (R) 2/2	AGX 4.5	1.0	14.0	4.5/5.6	10.4	56.0	40
CAM (R) 2/3	AGX 3.0	1.0	13.0	3.0/3.4	7.1	52.0	40
CAM (R) 2/3	AGX 4.5	1.0	14.0	4.5/5.6	10.4	60.0	40
CAM (R) 2/3	AGX 6.5	1.0	14.0	6.5/7.5	15.2	63.0	40
CAM (R) 2/4	AGX 3.0	1.0	14.0	3.0/3.4	7.1	56.0	40
CAM (R) 2/4	AGX 4.5	1.0	14.0	4.5/5.6	10.4	68.0	40
CAM (R) 2/4	AGX 6.5	1.0	14.0	6.5/7.5	15.2	71.0	40
CAM (R) 2/5	AGX 3.0	1.0	14.0	3.0/3.4	7.1	60.0	40
CAM (R) 2/5	AGX 4.5	1.0	14.0	4.5/5.6	10.4	74.0	40
CAM (R) 2/5	AGX 6.5	1.0	14.0	6.5/7.5	15.2	77.0	40
CAM (R) 2/6	AGX 3.0	1.0	14.0	3.0/3.4	7.1	64.0	40
CAM (R) 2/6	AGX 4.5	1.0	14.0	4.5/5.6	10.4	78.0	40
CAM (R) 2/6	AGX 6.5	1.0	14.0	6.5/7.5	15.2	81.0	40
CAM 3/2	AGX 8.5	6.0	30.0	8.5/9.7	19.0	120.0	40
CAM 3/2	CKPx 12.0	6.0	30.0	13.5/15.7	31.0	150.0	25
CAM 3/3	AGX 8.5	6.0	30.0	8.5/9.7	19.0	138.0	40
CAM 3/3	CKPx 12.0	6.0	30.0	13.5/15.7	31.0	168.0	25
CAM 3/3	CKPx 19.0	6.0	30.0	22.0/25.0	49.5	213.0	25
CAM 3/4	CKPx 12.0	6.0	35.0	13.5/15.7	31.0	186.0	25
CAM 3/4	CKPx 19.0	6.0	35.0	22.0/25.0	49.5	231.0	25

List of parts CAM 1 / CAM 2

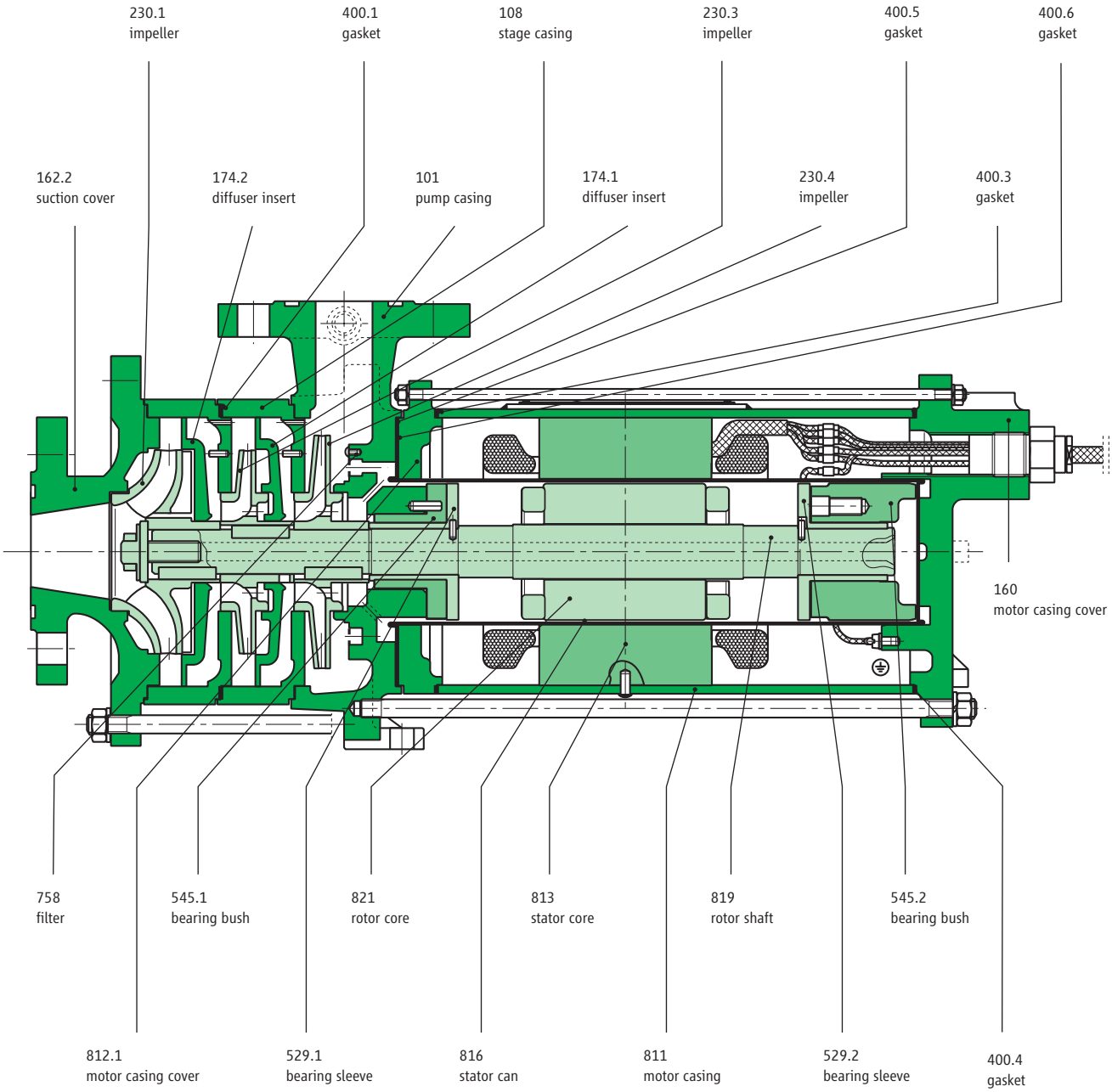

Dimensional drawing for motor type: AGX 1.0 / AGX 3.0 / AGX 4.5 / AGX 6.5

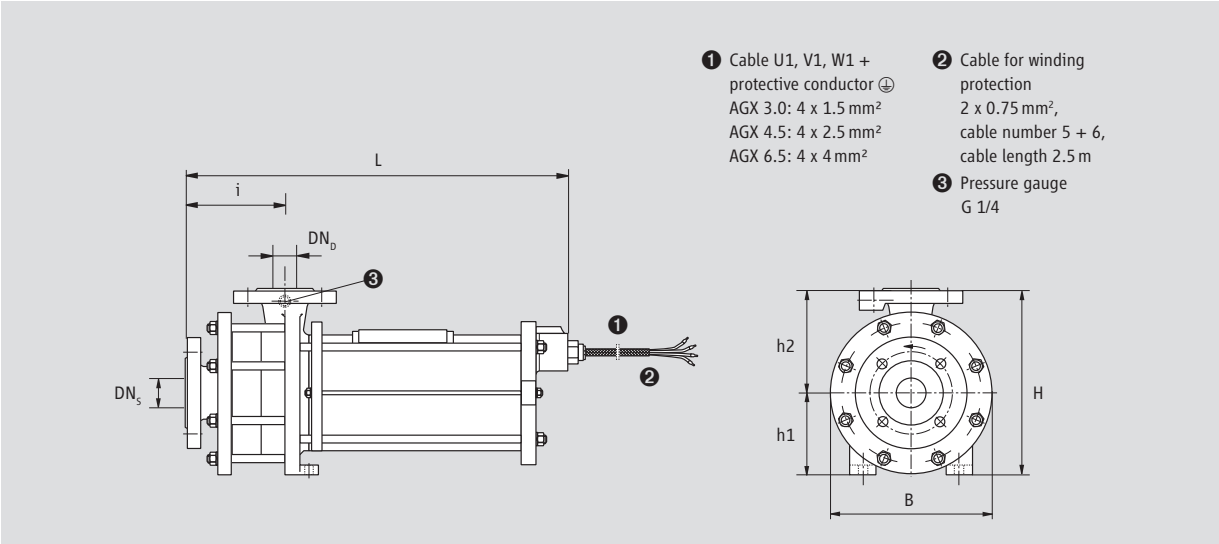

CAM 1-Design

Dimension	CAM 1/2-stage	CAM 1/3-stage	CAM 1/4-stage	CAM 1/5-stage
	AGX 1.0	AGX 1.0	AGX 1.0	AGX 1.0
Length/L	419	447	475	503
Width/W	160	160	160	160
Height/H	210	210	210	210
h1	90	90	90	90
h2	120	120	120	120
i	112	140	168	196
DN_S	25	25	25	25
DN_D	20	20	20	20

CAM 2-Design

Dimension	CAM 2/2-stage	CAM 2/3-stage	CAM 2/4-stage	CAM 2/5-stage	CAM 2/6-stage
	AGX 3.0/4.5	AGX 3.0 to 6.5	AGX 3.0 to 6.5	AGX 3.0 to 6.5	AGX 3.0 to 6.5
Length/L	536	577	618	659	700
Width/W	218	218	218	218	218
Height/H	250	250	250	250	250
h1	110	110	110	110	110
h2	140	140	140	140	140
i	135	176	217	258	299
DN_S	40	40	40	40	40
DN_D	32	32	32	32	32

List of parts CAMR 2

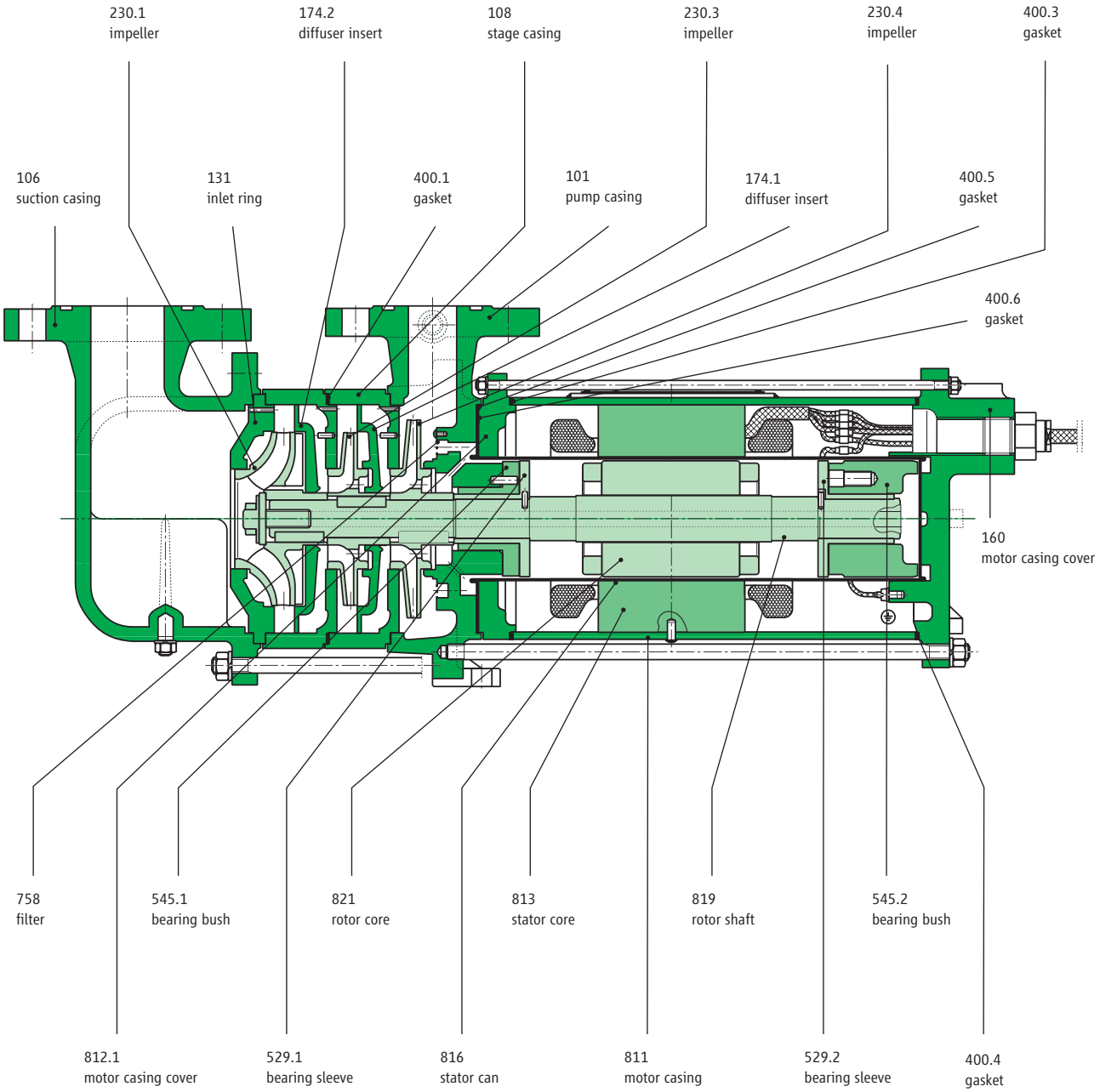

Dimensional drawing for motor type: AGX 3.0 / AGX 4.5 / AGX 6.5

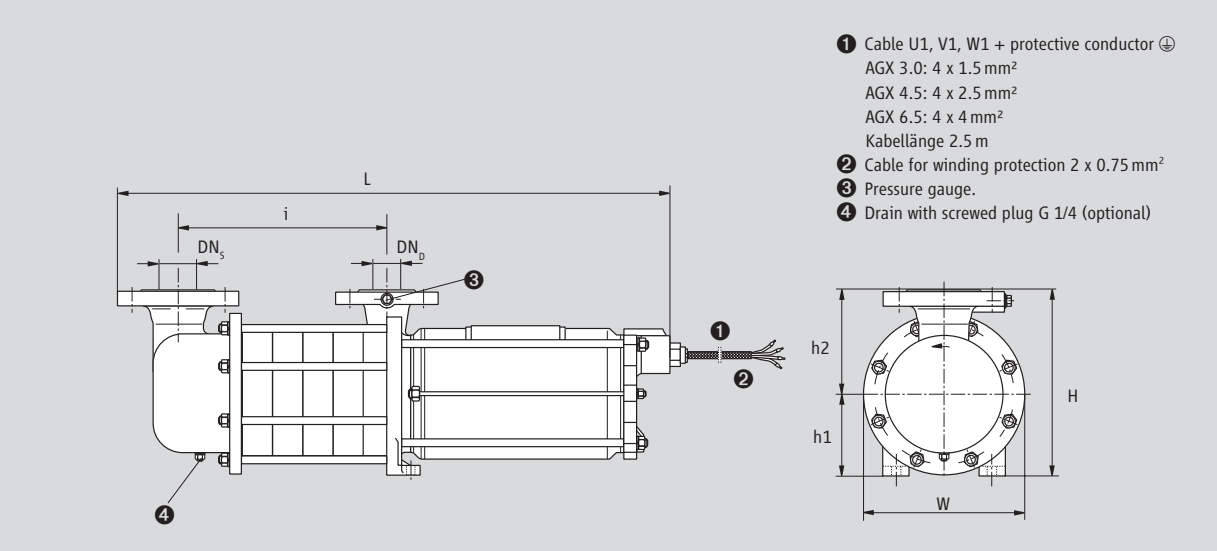

CAMR 2-Design

Dimension	CAMR 2/2-stage	CAMR 2/3-stage	CAMR 2/4-stage	CAMR 2/5-stage	CAMR 2/6-stage
	AGX 3.0/4.5	AGX 3.0 to 6.5	AGX 3.0 to 6.5	AGX 3.0 to 6.5	AGX 3.0 to 6.5
Length/L	649	690	731	772	813
Width/W	218	218	218	218	218
Height/H	250	250	250	250	250
h1	110	110	110	110	110
h2	140	140	140	140	140
i	160	201	242	283	324
DN_S	50	50	50	50	50
DN_D	32	32	32	32	32

List of parts CAM 3

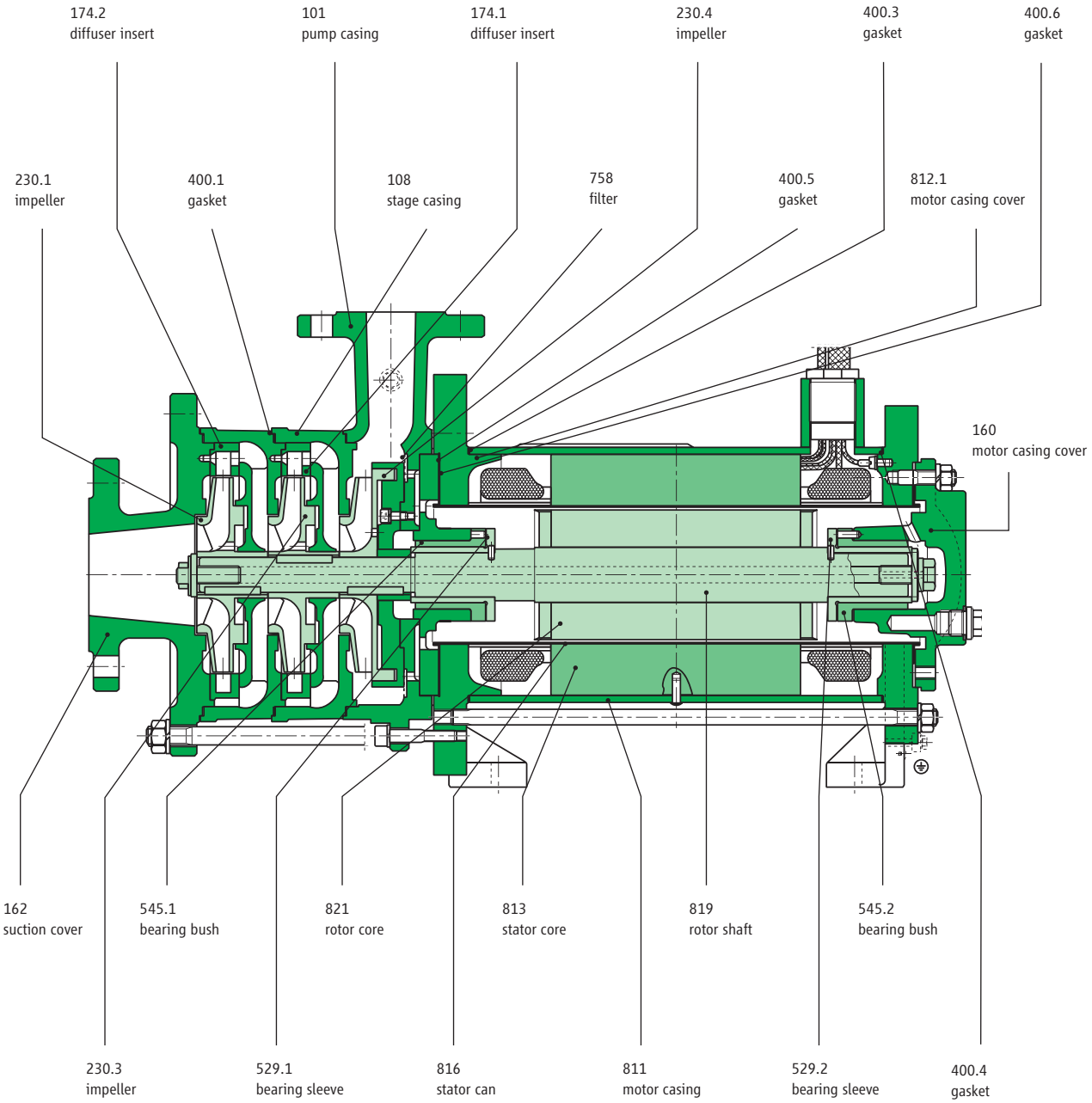

Dimensional drawing for motor type: AGX 8.5 / CKPx 12.0 / CKPx 19.0

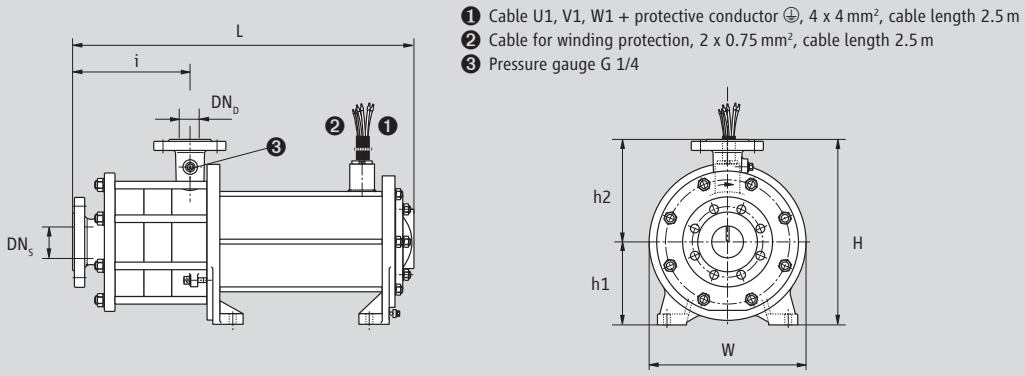

CAM 3-Design

Dimension	CAM 3/2-stage	CAM 3/2-stage	CAM 3/2-stage	CAM 3/3-stage	CAM 3/3-stage	CAM 3/3-stage	CAM 3/4-stage	CAM 3/4-stage
	AGX 8.5	CKPx 12.0	CKPx 19.0	AGX 8.5	CKPx 12.0	CKPx 19.0	CKPx 12.0	CKPx 19.0
Length/L	597	642	707	654	699	764	756	821
Width/W	250	290	340	250	290	340	290	340
Height/H	355	380	380	355	380	380	380	380
h1	145	170	170	145	170	170	170	170
h2	210	210	210	210	210	210	210	210
i	184	184	184	241	241	241	298	298
DN_S	65	65	65	65	65	65	65	65
DN_D	40	40	40	40	40	40	40	40

CONSTANT FLOW REGULATOR

General

The constant flow regulator has been developed especially for refrigeration plants. These valves facilitate a safe operation of pumps in a sphere, which normally is impossible for pumps with Q_{max}-orifice. Figure 3 shows the additional operational range which is obtained by the application of a constant flow regulator instead of a Q_{max}-orifice. Often a smaller pump, more economically priced, can be installed.

Operation

The constant flow regulator must remain full of fluid during system operation. The operation of the valve is dependent on the characteristics of the flowing media. It is therefore important that when ordering a valve, complete fluid specifications are included. Specific gravity is the most important value for the correct design of a valve.

Maintenance

There is no need for regular maintenance of the constant flow regulator and no readjustment is required. Spare cartridge assemblies may be ordered when required.

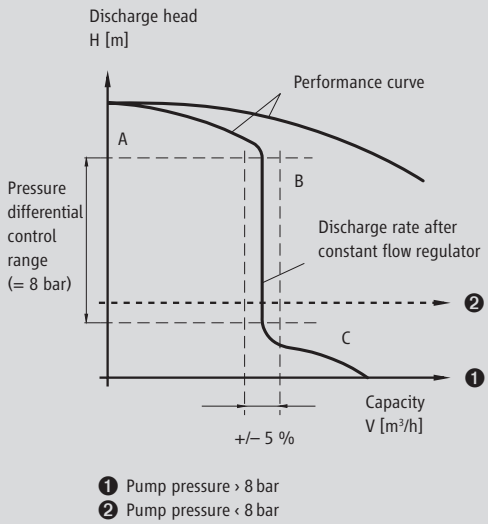

Figure 3

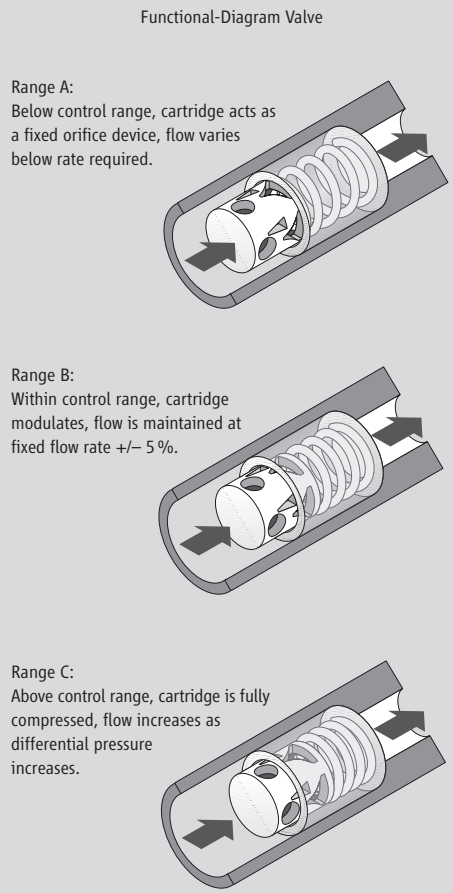

Figure 4

Application sector

Constant flow regulators are intended to be installed at the outlet of refrigerant liquid pumps. These regulators accurately control the flow rate and enable pumps to safely function in a range not normally available to pumps using discharge orifices. They enable pumps to operate closer to their unrestricted pump flow curve but not to exceed the calibrated quantity of flow. They will prevent a pump from operating in a region which exceeds its motor horsepower rating and required NPSH. (see diagram at Figure 3)

Principles of operation

Flow limitation is achieved by specially shaped ports in a spring-loaded, moving piston (Figure 4). Due to the pressure differential before and behind the piston, it oscillates which in turn changes the exposed area of the orifice. As the pressure differential increases, the cartridge moves to counterbalance the spring force. This displacement moves part of the variable port past the stationary orifice plate. If the pressure differential decreases, the cartridge oscillates in response to the pressure differential which in turn increases the exposed area of the orifice. If the pressure differential exceeds a specified maximum (pressure differential control range = 8 bar), the spring is fully compressed and the valve acts as a fixed orifice device. This also operates if the orifice. If the pressure differential exceeds a specified maximum (pressure differential control range = 8 bar), the spring is fully compressed and the valve acts as a fixed orifice device. This also operates if the pressure drops beyond the required minimum.

List of parts

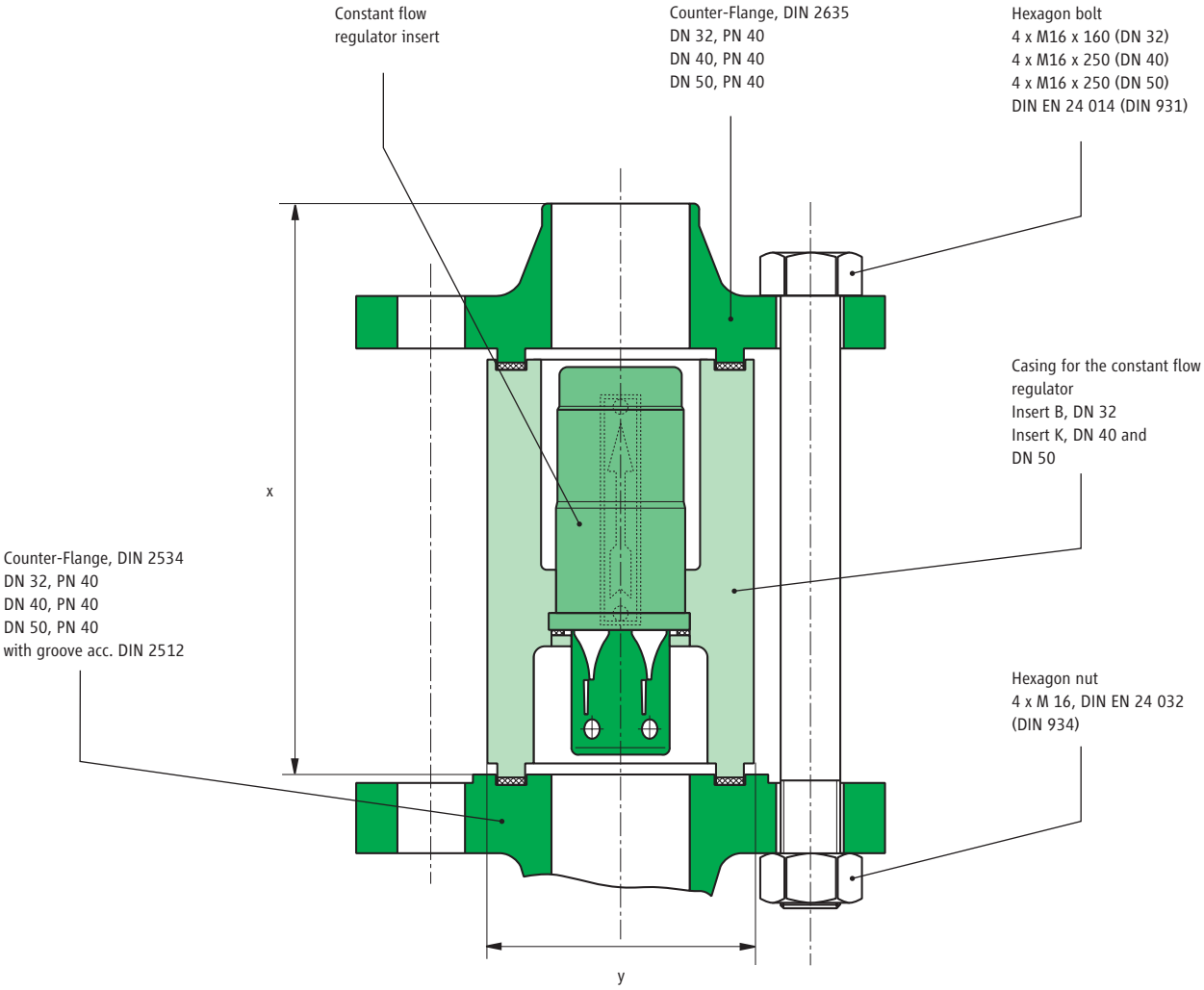

The valve is available for the following flow rates:

Model	NW	for pump type	Dimension x / y	max. flow rates for H_2O
NQL-61-44-8	32	CAM 2 / CAMR 2 / CNF 32-160	150 / 70	9.99 m^3/h
NQL-62-85-8	40	CAM 3 / CNF 40 – 160 / CNF 40 – 200	224 / 90	19.30 m^3/h
	50	CNF 50 – 160 / CNF 50 – 200	227 / 100	
NQL-62-110-8	40	CAM 3 / CNF 40 – 160 / CNF 40 – 200	224 / 90	25.00 m^3/h
	50	CNF 50 – 160 / CNF 50 – 200	227 / 100	
NQL-62-150-8	40	CAM 3	224 / 90	34.10 m^3/h
	50	CNF 50 – 160 / CNF 50 – 200	227 / 100	

Orifice Plates

It is possible to protect a HERMETIC pump from extreme flow conditions by installing 2 orifice plates. The Q_{min}-orifice guarantees the necessary flow for the motor cooling and the bearing lubrication. It also allows correct venting of the pump at standstill. The Q_{max}-orifice ensures that the minimum differential pressure is maintained in the rotor space. This is necessary for the stabilization of the hydraulic axial thrust compensation and for the avoidance of the partial current vaporization. You can see the installation of the orifices on page 3.

Inducer

Inducers are axial impellers, which are installed closely in front of the first impeller of a centrifugal pump on the same shaft and which cause an additional static pressure in front of the impeller (Figure 5). They are particularly used where the NPSHA is not sufficient in order to reduce the NPSHR value of the pump. In many cases inducers are also used preventatively if the resistances of the suction line cannot be determined exactly or if the suction head is unpredictable, or if there is a change of the overpressure above the vapour pressure of the liquid. Furthermore inducers are particularly suitable for the transport of liquids, which are affected with dissolved gases. In both cases the inducer can serve to avoid cavitation and minimum capacity.

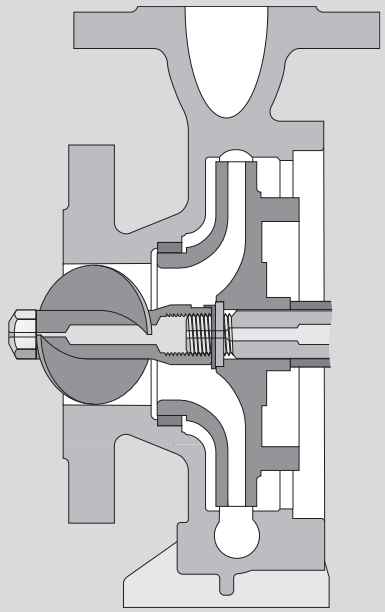

Figure 5

ONLINE SERVICES

Online design

The user-oriented design software that can be used via our website makes it easier to select the refrigerant pump that is most suitable for you. In particular, energy-saving options in connection with our new product HermEco® can be analysed. The software-based design for frequency-controlled operation is comfortably possible. Minimum and maximum speeds, as well as the corresponding operating range are returned.

Quick registration

Would you like to convince yourself of the numerous benefits of our new selection software? It's as easy as this: Register quickly and easily as a new user on our homepage. After you have registered and received your access data, you can immediately test the selection software with no obligation. Users who are already registered just have to logon with their existing access data. It is not necessary to register again.

If you have forgotten your access data, please send us an e-mail to: register@hermetic-pumpen.com
You will receive the necessary access data right away.

Further online services

We provide uncomplicated 3D CAD models for your planning and design office.

The benefits in detail

- Direct inputting of the required refrigeration capacity
- Dynamic selection according to power consumption, NPSH
- Data for all common refrigerants are stored in the database
- Integration of various pump protection mechanisms, e.g. Q-max baffle, flow-control valve
- Designs can be created for speed-controlled drive units

See for yourself on
www.hermetic-pumpen.com

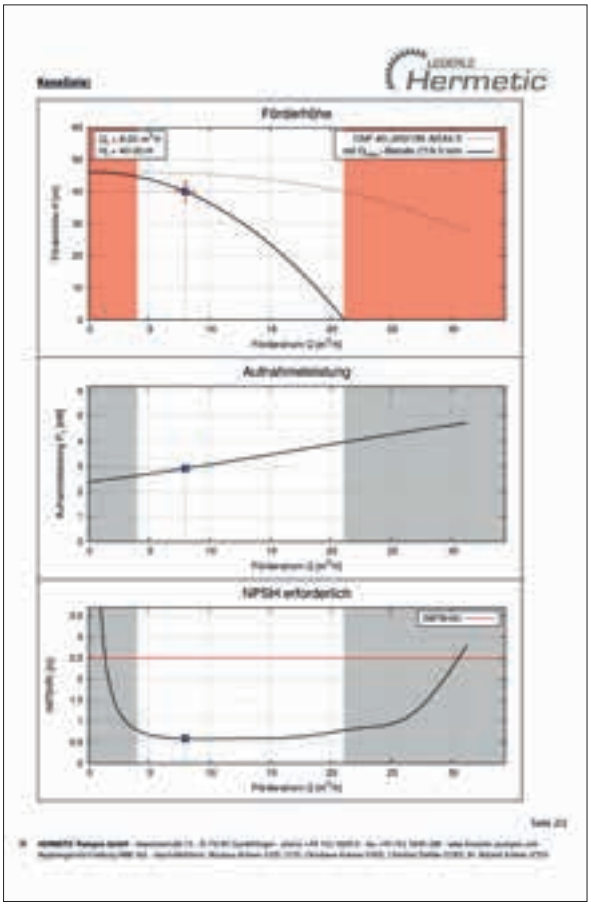

Example of display following pump selection

Among others, our products comply with:

- Directive 2006/42/EC (Machinery Directive)
- Explosion protection acc. to Directive 94/9/EC (ATEX); UL; KOSHA; NEPSI; CQST; CSA; Rostechnadzor
- Directive 96/61/EC (IPPC Directive)
- Directive 1999/13/EC (VOC Directive)
- TA-Luft
- RCC-M, Niveau 1, 2, 3

HERMETIC-Pumpen GmbH is certified acc. to:

- ISO 9001:2008
- ISO 14001:2004
- TR TS 012/2011
- Directive 94/9/EC
- AD 2000 HP 0; Directive 97/23/EC
- DIN EN ISO 3834-2
- KTA 1401; AVS D 100 / 50; IAEA 50-C-Q
- Certified company acc. to § 19 I WH

Convincing service.

Important features are readiness, mobility, flexibility, availability and reliability. We are anxious to ensure a pump operation at best availability and efficiency to our customers.

Installation and commissioning

- service effected on site by own service technicians

Spare part servicing

- prompt and longstanding availability
- customized assistance in spare part stockkeeping

Repair and overhauling

- professional repairs including test run executed by the parent factory
- or executed by one of our service stations worldwide

Retrofit

- retrofit of your centrifugal pumps by installing a canned motor to comply with the requirements of the IPPC Directive

Maintenance and service agreement

- concepts individually worked out to increase the availability of your production facilities

Training and workshops

- extra qualification of your staff to ensure the course of your manufacture

KÄLTE / E / 11 / 2014

All details as stated in this document comply with the technical standard that is applicable at the date of printing. These details are subject to technical innovations and modifications at any time.

HERMETIC-Pumpen GmbH
Gewerbestrasse 51 · D-79194 Gundelfingen
phone +49 761 5830-0 · fax +49 761 5830-280
hermetic@hermetic-pumpen.com
www.hermetic-pumpen.com